PAVE#	PAVE DESCRIPTION	X	Y	LEAK TEST	ITEM 3 PART#	TEMPERATURE RANGE
1872 & 1872-NW40	VS15-AL-150-20-TE22-48-48	48 [1219]	48 [1219]	He @1ATM <1X10^-6 std cc/s OR LESS	-215 VITON	-20 °C TO 125 °C
1872-1	VS15L-SS-150-20-TE22-48-48	48 [1219]	48 [1219]	80 PSI NO BUBBLES 4 MINUTES MIN	-215 VITON	-20 °C TO 125 °C
1872-2	VS15-AL-150-20-TE22-48-48	48 [1219]	48 [1219]	1000 PSI NO BUBBLES 30 SECONDS MIN	-215 BUTYL	-59 °C TO 121 °C
1872-3	VS15-AL-150-20-TE22-48-48	48 [1219]	48 [1219]	450 PSI NO BUBBLES 1 MINUTES MIN	-215 VITON	-20 °C TO 125 °C
1872-4	VS15L-SS-150-20-TE22-48-48	48 [1219]	48 [1219]	He @1ATM <1X10^-6 std cc/s OR LESS	-215 TEFLON	-100 °C TO 125 °C
1872-5	VS15-AL-150-20-TE22-144-72	144 [3658]	72 [1829]	1000 PSI NO BUBBLES 30 SECONDS MIN	-215 BUTYL	-59 °C TO 121 °C

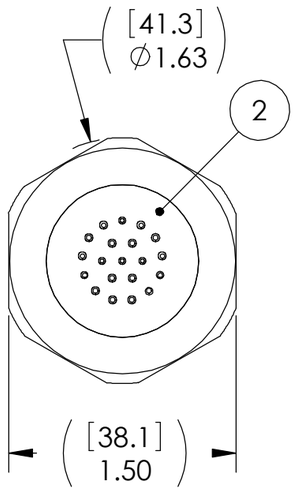

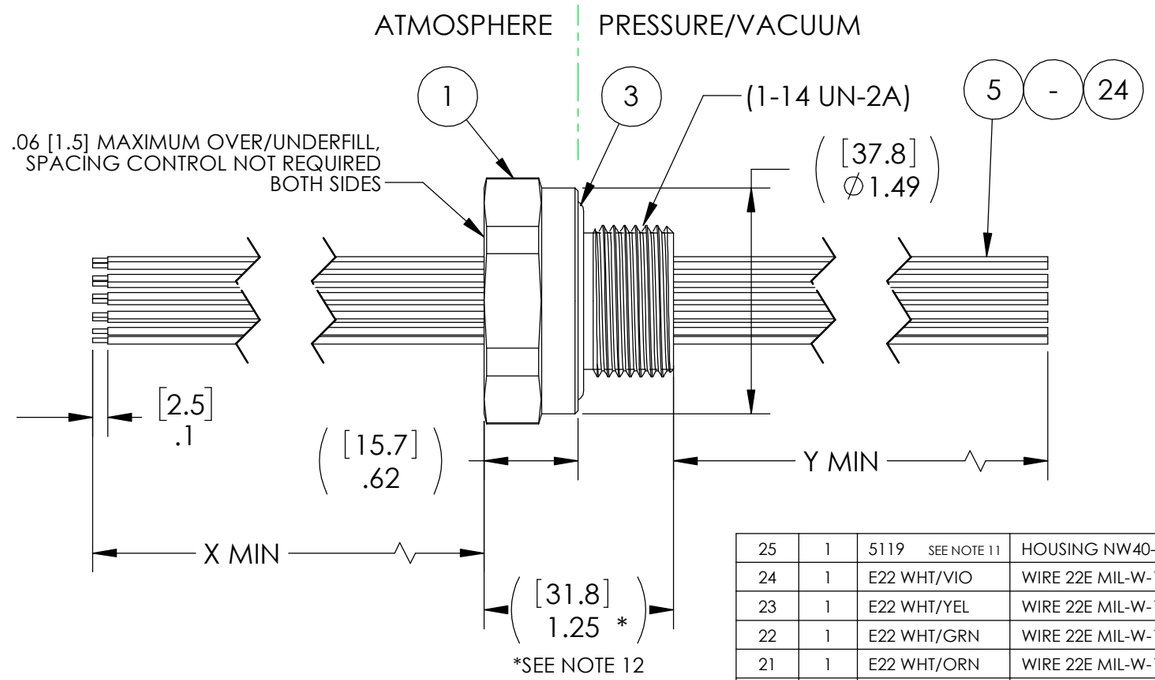

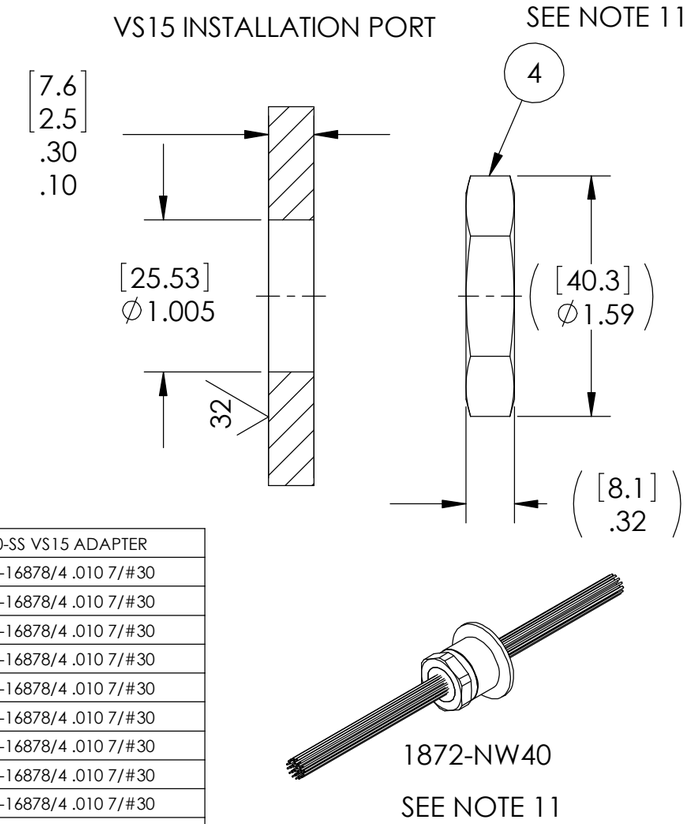

NOTES:

1. LEAK TEST: PER TABLE. A GREEN PAINT DOT INDICATES THE PART HAS PASSED THE TEST.
2. HYPOT 630 VDC 500 MEGOHMS MINIMUM 0.01 SECOND MINIMUM WIRE TO WIRE AND HOUSING.
3. ALCOHOL OR FOMBLIN YVAC 3 MAY BE USED TO LUBRICATE O-RINGS FOR VACUUM HELIUM LEAK TESTING.
4. ALL TESTS ARE PERFORMED AT ROOM TEMPERATURE.
5. ALL PARTS MUST PASS ALL TESTS.
6. WIRE POSITIONING IS APPROXIMATE & VARIABLE.
7. COSMETIC SURFACE VOIDS NOT ON O-RING SEALING SURFACES ARE ACCEPTABLE BASED ON THE SEAL'S DIAMETER:
   <= .5 [12.7] SEAL DIAMETER: ∅.035 [.89] MAX ALLOWED VOID SIZE
   > .5 [12.7] SEAL DIAMETER: ∅.060 [1.5] MAX ALLOWED VOID SIZE
8. REF-OPERATING TEMPERATURE SEE TABLE.
9. DIMENSIONS ARE INCHES [millimeters].
10. PAVE-SEAL CAN BE A BI-DIRECTIONAL HERMETIC SEAL FOR VACUUM AND MOST PRESSURES. FOR PRESSURES ABOVE 150 PSI (10 BAR), CHECK WITH SALES ENGINEERING.
11. 1872-NW40 ONLY: TESTED & SHIPS WITH ITEM 25, DOES NOT INCLUDE ITEM 4 (NUT).
12. 1872-1 & 1872-4 USE A VS15L-SS HOUSING (0161), WITH AN OVERALL LENGTH OF 1.88 [47.8] & VS15-SS NUT (0183).

ALL DIMENSIONS AND TOLERANCES APPLY TO FINISHED PART IN INCHES.
ALLOWABLE TOLERANCES UNLESS SPECIFIED OTHERWISE: NONE ±0.5
X.X DECIMAL ±0.1 X.XX DECIMAL ±0.02 X.XXX DECIMAL ±0.005
ANGLES ±1 DEGREE SURFACE FINISH 128 microinch RMS

ITEM	QTY	PART NUMBER	DESCRIPTION
25	1	5119 SEE NOTE 11	HOUSING NW40-SS VS15 ADAPTER
24	1	E22 WHT/VIO	WIRE 22E MIL-W-16878/4 .010 7/#30
23	1	E22 WHT/YEL	WIRE 22E MIL-W-16878/4 .010 7/#30
22	1	E22 WHT/GRN	WIRE 22E MIL-W-16878/4 .010 7/#30
21	1	E22 WHT/ORN	WIRE 22E MIL-W-16878/4 .010 7/#30
20	1	E22 WHT/BLU	WIRE 22E MIL-W-16878/4 .010 7/#30
19	1	E22 WHT/RED	WIRE 22E MIL-W-16878/4 .010 7/#30
18	1	E22 WHT/BLK	WIRE 22E MIL-W-16878/4 .010 7/#30
17	1	E22 WHT/BRN	WIRE 22E MIL-W-16878/4 .010 7/#30
16	1	E22 BLK/ORN	WIRE 22E MIL-W-16878/4 .010 7/#30
15	1	E22 BLK/WHT	WIRE 22E MIL-W-16878/4 .010 7/#30
14	1	E22 YELLOW	WIRE 22E MIL-W-16878/4 .010 7/#30
13	1	E22 WHT	WIRE 22E MIL-W-16878/4 .010 7/#30
12	1	E22 VIOLET	WIRE 22E MIL-W-16878/4 .010 7/#30
11	1	E22 RED	WIRE 22E MIL-W-16878/4 .010 7/#30
10	1	E22 ORANGE	WIRE 22E MIL-W-16878/4 .010 7/#30
9	1	E22 GREEN	WIRE 22E MIL-W-16878/4 .010 7/#30
8	1	E22 GRAY	WIRE 22E MIL-W-16878/4 .010 7/#30
7	1	E22 BROWN	WIRE 22E MIL-W-16878/4 .010 7/#30
6	1	E22 BLUE 7 STR	WIRE 22E MIL-W-16878/4 .010 7/#30
5	1	E22 BLK	WIRE 22E MIL-W-16878/4 .010 7/#30
4	1	1129 SEE NOTE 12	NUT VS15-AL
3	1	SEE TABLE	O-RING
2	A/R	PAVE-Seal 150	EPOXY BLACK
1	1	1898 SEE NOTE 12	HOUSING VS15-AL

PAVE technology co.
2751 Thunderhawk Court
Dayton, OH 45414-3445
U.S.A.
tel (937) 890-1100
fax (937) 8905165
www.pavetechnologyco.com

DESCRIPTION: *SEE TABLE

PART NUMBER: 1872 *SEE TABLE

MATERIAL: NOTED

REVISION LEVEL: N

PROJECTION