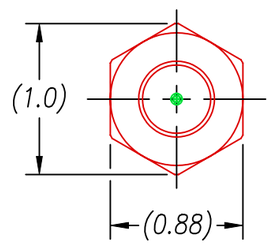

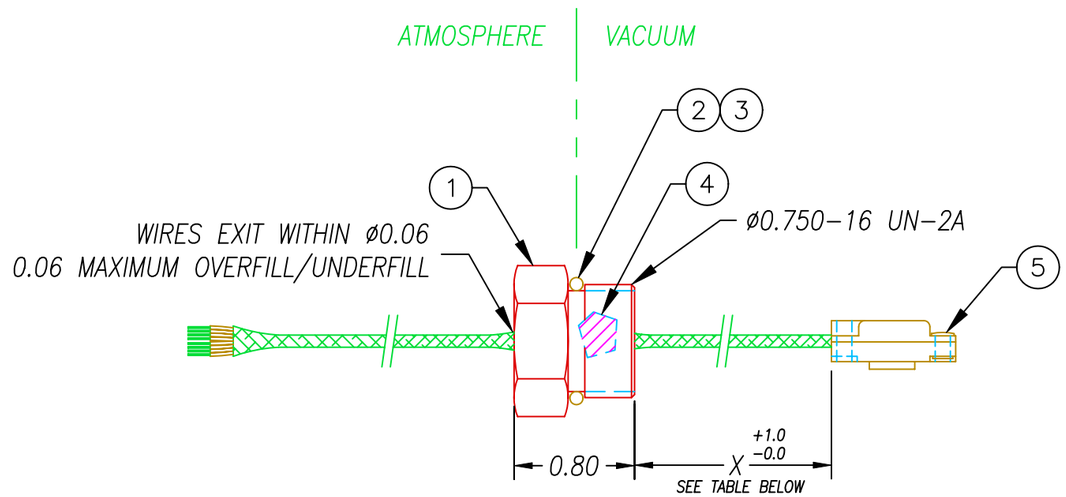

PART NUMBER	X
2471-01	15.50
2471-02	13.25

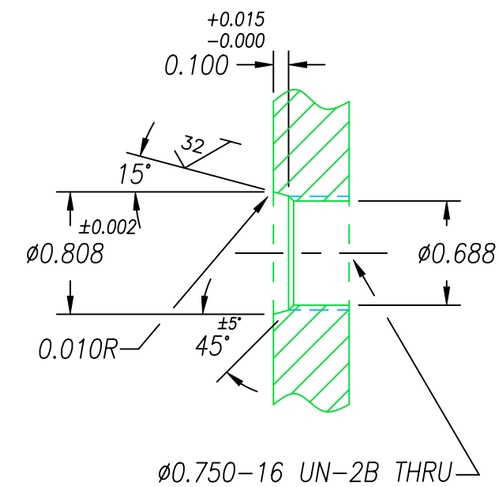

INSTALLATION/
LEAK TEST PORT

NOTES:
1. HE LEAK TEST @1 ATM. <10^-6 CC/S.
2. ALL TESTS ARE PERFORMED AT ROOM TEMPERATURE.
3. PERCENTAGE OF PARTS TESTED WILL BE 100% (MAY BE A LESSER PERCENTAGE FOR LARGE PRODUCTION QUANTITIES, UNLESS OTHERWISE NOTED OR REQUIRED).

ITEM	QTY	PART#	DESCRIPTION
5	1	SENSOR 8-TE32	SENSOR W/ SHIELDED 8-TE32
4	A/R	PAVE-Seal 80	EPOXY BLACK
3	1	-908 VITON	O-RING -908 VITON 75
2	A/R	PARKER O-LUBE	LUBRICANT O-RING BARIUM-BASED
1	1	2485	HOUSING SO12-SS SP

ALL DIMENSIONS AND TOLERANCES APPLY TO FINISHED PART IN INCHES
ALLOWABLE TOLERANCES UNLESS SPECIFIED OTHERWISE: NONE +/-0.5
.X DECIMAL +/- 0.1 .XX DECIMAL +/- 0.02 .XXX DECIMAL +/-0.005
ANGLES +/- 1 DEG SURFACE FINISH 128 microinch RMS

PAVE technology co.
2751 Thunderhawk Court
Dayton, Ohio 45414-3445
U.S.A.
(937)890-1100
fax (937)890-5165
www.pavetechnologyco.com

DESCRIPTION PAVE-Seal® Cable Harnesses
SO12-SS-80-8-TE32-*-X

PART NUMBER 2471

REVISON LEVEL A

PROJECTION