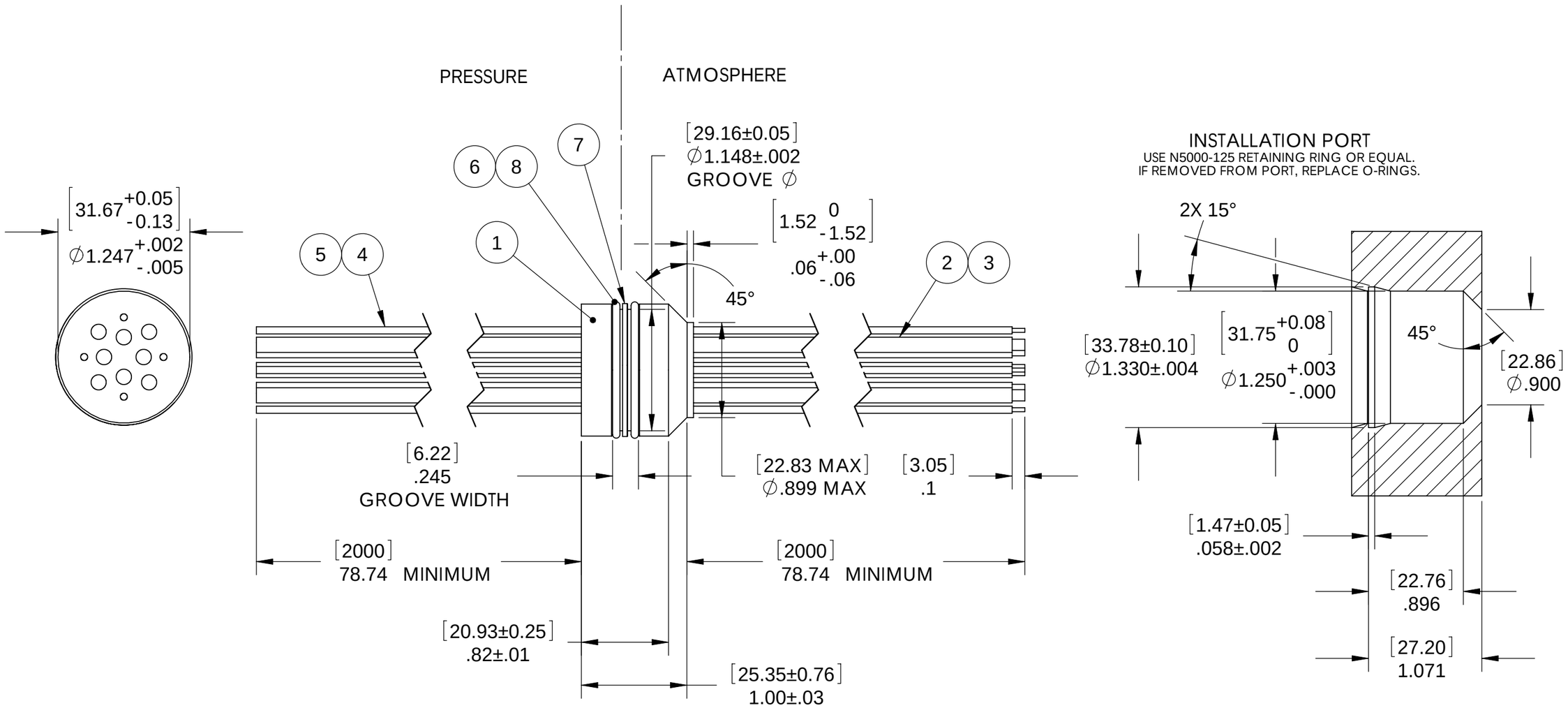

NOTES:

1. LEAK TEST: 3000 PSI, NO BUBBLES 30 SECONDS MINIMUM.
2. HYPOT 630 VDC 500 MEGOHMS MINIMUM 0.01 SECOND MINIMUM WIRE TO WIRE.
3. ALL TESTS ARE PERFORMED AT ROOM TEMPERATURE.
4. ALL PARTS MUST PASS ALL TESTS.
5. WIRE POSITIONING IS APPROXIMATE & VARIABLE.
6. NO VOIDS ARE ACCEPTABLE ON O-RING SEALING SURFACES, VOIDS SMALLER THAN ∅0.035 ARE ACCEPTABLE ON ALL OTHER SURFACES.
7. REF-OPERATING TEMPERATURE -20˚C TO 125˚C.

ITEM	QTY	PART NUMBER	DESCRIPTION
8	A/R	PARKER O-LUBE	LUBRICANT O-RING BARIUM-BASED
7	1	-024 TEFLON	RING -024 TEFLON BACKUP SINGLE
6	2	-024 VITON	O-RING -024 VITON 75
5	2	EE20 MIL BLU 19	WIRE 20EE MIL-W-16878/5 19
4	2	EE20 MIL WHT 19	WIRE 20EE MIL-W-16878/5 19
3	4	EE10 BLACK	WIRE 10EE MIL-W-16878/5 .017 3
2	4	EE10 RED	WIRE 10EE MIL-W-16878/5 .017 3
1	A/R	PAVE-Seal 150	EPOXY BLACK

PAVE technology co.
2751 Thunderhawk Court
Dayton, OH 45414-3445
U.S.A.
tel (937) 890-1100
fax (937) 8905165
www.pavetechnologyco.com

DESCRIPTION: SP20-E-150-8/4-TEE10/20-2-2m

PART NUMBER: 3189

MATERIAL: NOTED

REVISION LEVEL: A

PROJECTION:

ALL DIMENSIONS AND TOLERANCES APPLY TO FINISHED PART IN INCHES.
ALLOWABLE TOLERANCES UNLESS SPECIFIED OTHERWISE: NONE ±0.5
X.X DECIMAL ±0.1 X.XX DECIMAL ±0.02 X.XXX DECIMAL ±0.005
ANGLES ±1 DEGREE SURFACE FINISH 128 microinch RMS