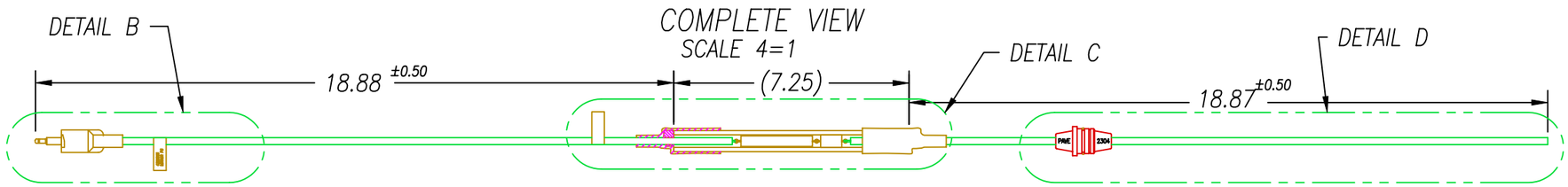

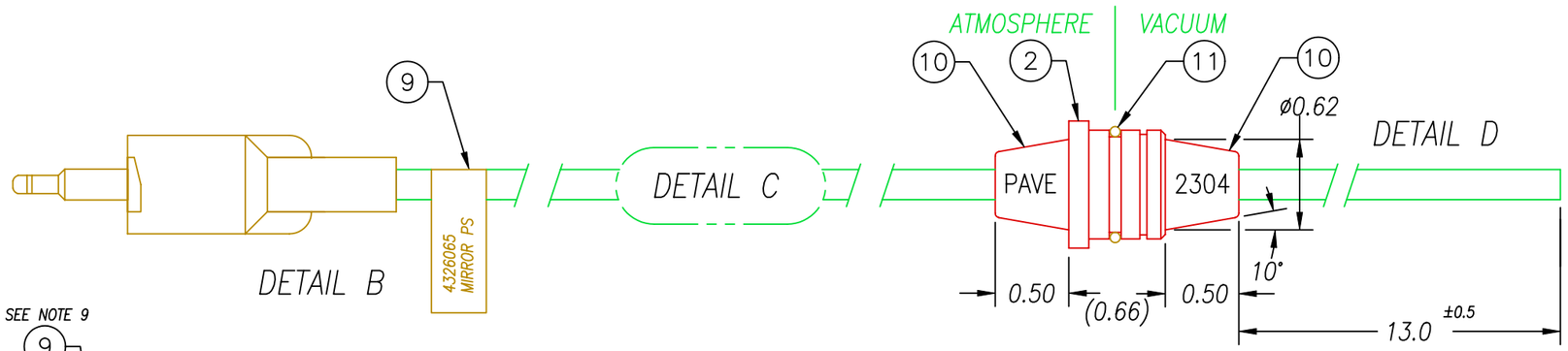

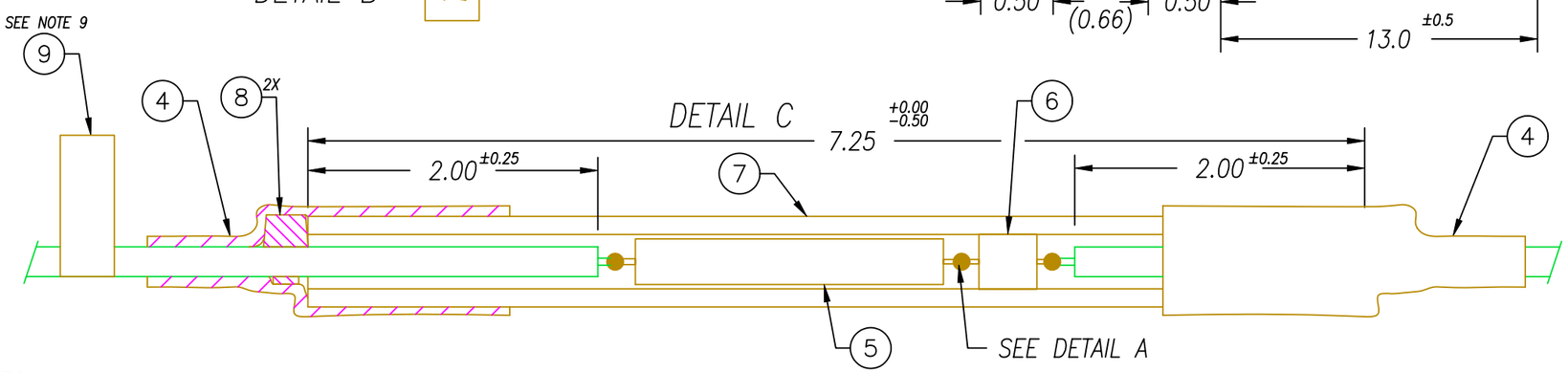

RECOMMENDED INSTALLATION PORT DIMENSIONS

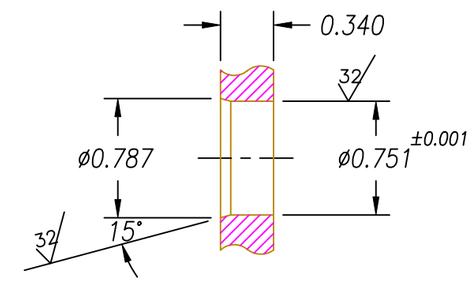

DETAIL A

USED FOR ALL SOLDER CONNECTIONS

TWIST AND TIN WIRE BEFORE FORMING LOOP

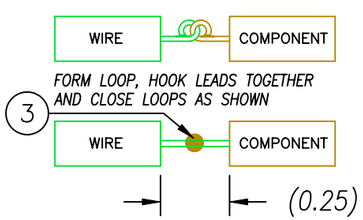

SOLDER CONNECTION TO FORM A BALL OF SOLDER USING ITEM 3

NOTES:

1. HE LEAK TEST @1 ATM. <10^−7 CC/S. WITH O−RING CLEAN W/METHANOL BEFORE INSERTING INTO TEST PORT.
2. 30 KVDC HYPOT TEST WITH .000005 AMPS MAXIMUM LEAKAGE TO LEAK TEST PORT.
3. ALL TESTS ARE DONE AT ROOM TEMPERATURE & HUMIDITY.
4. PERCENTAGE OF PARTS TESTED WILL BE 100% (MAY BE A LESSER PERCENTAGE FOR LARGE PRODUCTION QUANTITIES, UNLESS OTHERWISE NOTED OR REQUIRED).
5. O−RING TO BE SHIPPED DRY, NO O−LUBE ALLOWED.
6. CONTINUOUS CONTACT OF METHANOL TO VITON O−RING WILL CAUSE O−RING TO SWELL AND NOT SEAL PROPERLY.
7. "PAVE" & "2304" MARKINGS APPROXIMATELY AS SHOWN.
8. REFERENCE− RETAINING RING WALDES TRUARC #5100−75.
9. CONTINUITY TEST: 1 ±0.01 MΩ WIRE END TO END OF MATING CONNECTOR.

ITEM	QTY	PART#	DESCRIPTION
11	1	−016 VITON	O−RING −016 VITON 75
10	A/R	PAVE−Seal 150	EPOXY BLUE
9	2	−	PRINTABLE LABEL
8	2	WIRE TIE #824C	WIRE TIE NICHIFU #14/50LB. CAPACITY
7	7.25"	TUBE 3/8X5/8	TUBING TEFLON 3/8"ID X 5/8"OD (WHT)
6	1	434−15−102J	CHOKE 1mH 5% (MOUSER)
5	1	MG750−1M−1%	RESISTOR H.V. 1 MEGOHM 1% (CADDOCK)
4	2	SPC #PHS−048	HEATSHRINK 3:1 RATIO 3/4"
3	A/R	SN96AG04	SOLDER LEAD FREE
2	1	0130	HOUSING SPF12−E
1	1	ALDEN #B200PA48	BELDEN 9867 W/ALDEN B200−200

ALL DIMENSIONS AND TOLERANCES APPLY TO FINISHED PART IN INCHES
ALLOWABLE TOLERANCES UNLESS SPECIFIED OTHERWISE: NONE +/−0.5
.X DECIMAL +/− 0.1 .XX DECIMAL +/− 0.02 .XXX DECIMAL +/−0.005
ANGLES +/− 1 DEG SURFACE FINISH 128 microinch RMS

PAVE technology co.
2751 Thunderhawk Court
Dayton, Ohio 45414−3445
U.S.A.
(937)890−1100
fax (937)890−5165
www.pavetechnologyco.com

DESCRIPTION PAVE−Seal® Cable Harnesses
SPF12−E−150−1−B200PA48−31T−13

PART NUMBER 2304

REVISON LEVEL H

PROJECTION