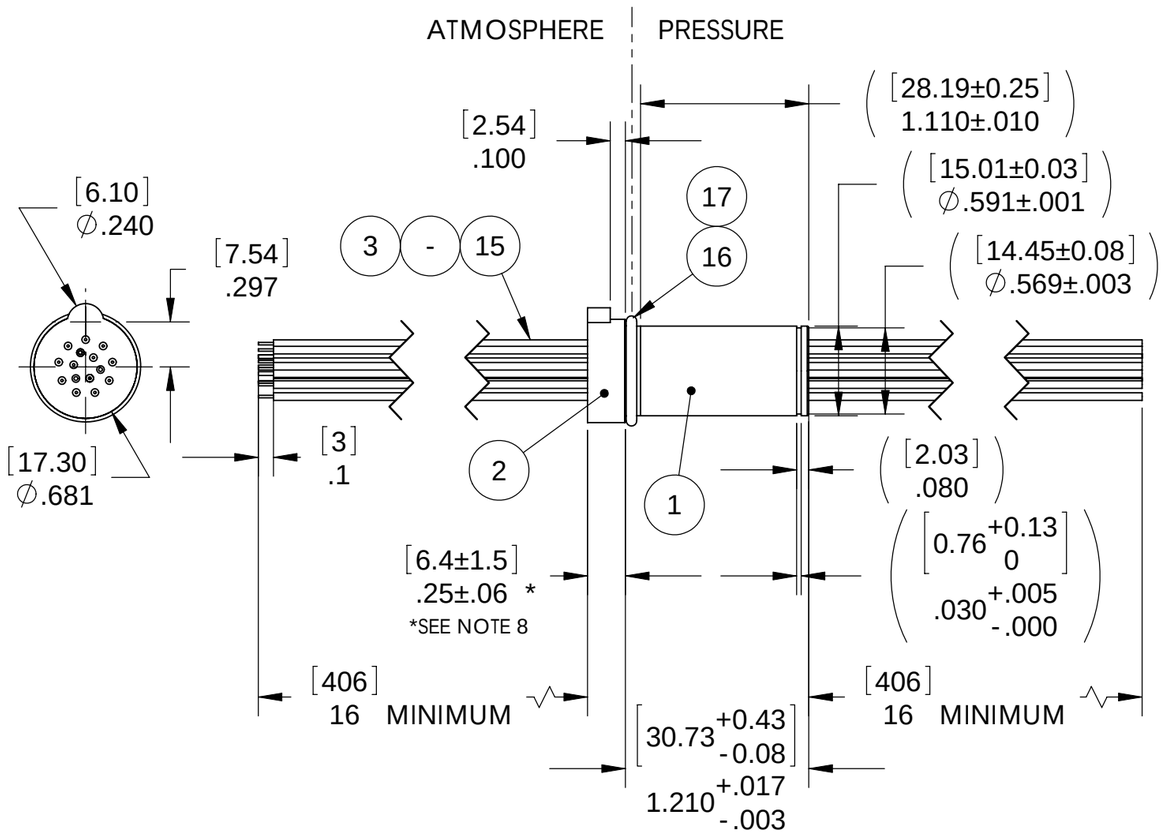

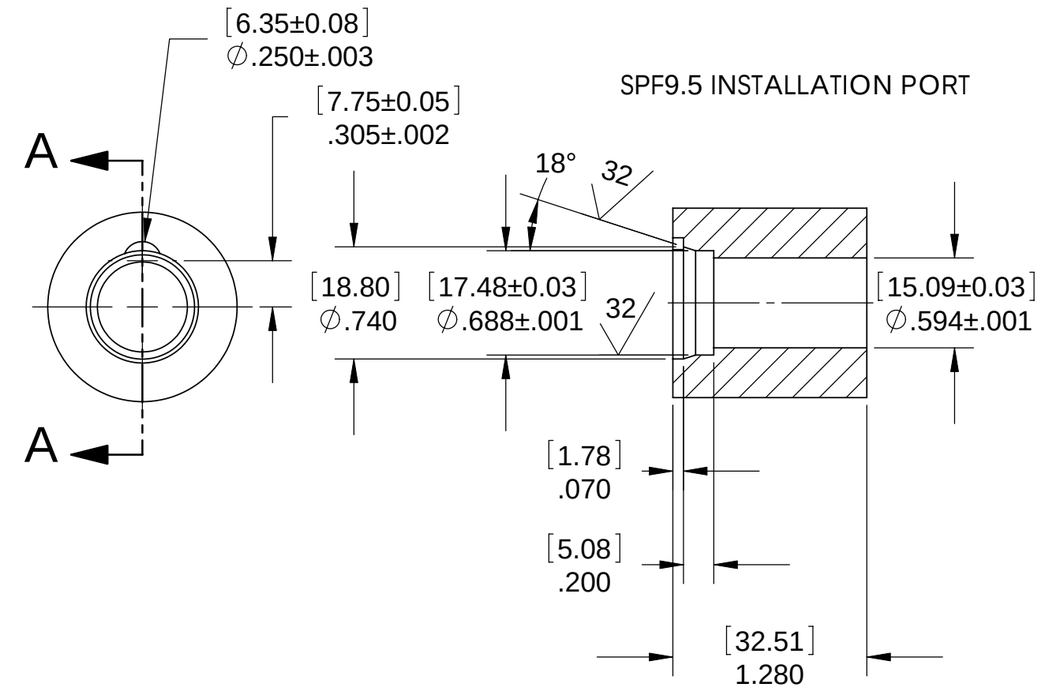

RECOMMENDED RETAINING RING
SMALLEY WS-59 OR EQUAL

NOTES:

1. LEAK TEST: 1000 PSI, NO BUBBLES AROUND BASE OF WIRES 30 SECONDS MINIMUM. PARTS ARE TESTED WITH THE SMALLEY WS-59 RETAINING RING INSTALLED.
2. HYPOT 630 VDC 500 MEGOHMS MINIMUM 0.01 SECOND MINIMUM WIRE TO WIRE AND HOUSING.
3. ALL TESTS ARE PERFORMED AT ROOM TEMPERATURE.
4. ALL PARTS MUST PASS ALL TESTS.
5. WIRE SPACING WILL BE CONTROLLED THROUGH SEAL.
6. WIRES ARE NOT REQUIRED TO BEND SHARPLY AT EPOXY SEAL SURFACE.
7. NO VOIDS LARGER THAN ∅0.035 [.89] ARE ACCEPTABLE.
8. "DISHING" OF THE FLANGE IN EITHER DIRECTION IS NOT TO EXCEED SPECIFIED DIMENSION.
9. ITEM 18 IS INCLUDED BUT NOT SHOWN.
10. REF-OPERATING TEMPERATURE -40˚C TO 125˚C.
11. QUALIFICATION ONLY: THERMAL CYCLE -65˚C TO 125˚C, 3 CYCLES, 1 HOUR HOLD AT TEMPERATURE.
12. DIMENSIONS ARE INCHES [millimeters].

ITEM	QTY	PART NUMBER	DESCRIPTION
18	1	RR WS-59	RETAINING RING EXTERNAL .594
17	A/R	PARKER O-LUBE	LUBRICANT O-RING BARIUM-BASED
16	1	-015 VITON LT	O-RING -015 VITON LT 75
15	2	EE26 UL1180 YEL	WIRE 26EE UL1180 7/#34
14	1	EE26 UL1180 WHT	WIRE 26EE UL1180 7/#34
13	1	EE26 UL1180 VIO	WIRE 26EE UL1180 7/#34
12	1	EE26 UL1180 RED	WIRE 26EE UL1180 7/#34
11	1	EE26 UL1180 ORG	WIRE 26EE UL1180 7/#34
10	1	EE26 UL1180 GRY	WIRE 26EE UL1180 7/#34
9	1	EE26 UL1180 GRN	WIRE 26EE UL1180 7/#34
8	1	EE26 UL1180 BRN	WIRE 26EE UL1180 7/#34
7	2	EE26 UL1180 BLU	WIRE 26EE UL1180 7/#34
6	1	EE26 UL1180 BLK	WIRE 26EE UL1180 7/#34
5	1	EE22 UL1180 RED	WIRE 22EE UL1180 MARKED 7/#30
4	1	EE22 UL1180 GRN	WIRE 22EE UL1180 MARKED 7/#30
3	1	EE22 UL1180 BLK	WIRE 22EE UL1180 MARKED 7/#30
2	A/R	PAVE-Seal 200FR	EPOXY BLACK HI-TEMP FLAME RESISTANT
1	1	3786	SLEEVE 6061 AL W/ RR GROOVE FOR WS-59

PAVE technology co.
2751 Thunderhawk Court
Dayton, OH 45414-3445
U.S.A.
tel (937) 890-1100
fax (937) 8905165
www.pavetechnologyco.com

DESCRIPTION: SPF9.5-E-200FR-3/12-EE22/26-16-16

PART NUMBER: 3749

MATERIAL: NOTED

REVISION LEVEL: B

PROJECTION:

ALL DIMENSIONS AND TOLERANCES APPLY TO FINISHED PART IN INCHES.
ALLOWABLE TOLERANCES UNLESS SPECIFIED OTHERWISE: NONE ±0.5
X.X DECIMAL ±0.1 X.XX DECIMAL ±0.02 X.XXX DECIMAL ±0.005
ANGLES ±1 DEGREE SURFACE FINISH 128 microinch RMS