PAVE#	PAVE DESCRIPTION	A	B	LEAK TEST	ITEM 5	ITEM 7
2411	PT2-SS-150-5-TE24-12-12	12 [305]	12 [305]	2900 PSI [200 BAR], NO N2 BUBBLES 30 SECONDS MINIMUM	E24 VIOLET	E24 GREEN
2411-1	PT2-SS-150-5-TE24-96-96	96 [2438]	96 [2438]	80 PSI, NO BUBBLES 9 MINUTES MINIMUM	E24 VIOLET	E24 GREEN
2411-2	PT2-SS-150-5-TE24-12-12	12 [305]	12 [305]	80 PSI, NO BUBBLES 90 SECONDS MINIMUM	E24 VIOLET	E24 GREEN
2411-3	PT2-SS-150-5-TE24-12-12	12 [305]	12 [305]	80 PSI, NO BUBBLES 90 SECONDS MINIMUM	E24 BLACK	E24 GREEN
2411-4	PT2-SS-150-5-TE24-24-24	24 [610]	24 [610]	80 PSI, NO BUBBLES 2 MINUTES MINIMUM	E24 BLACK	E24 BLUE

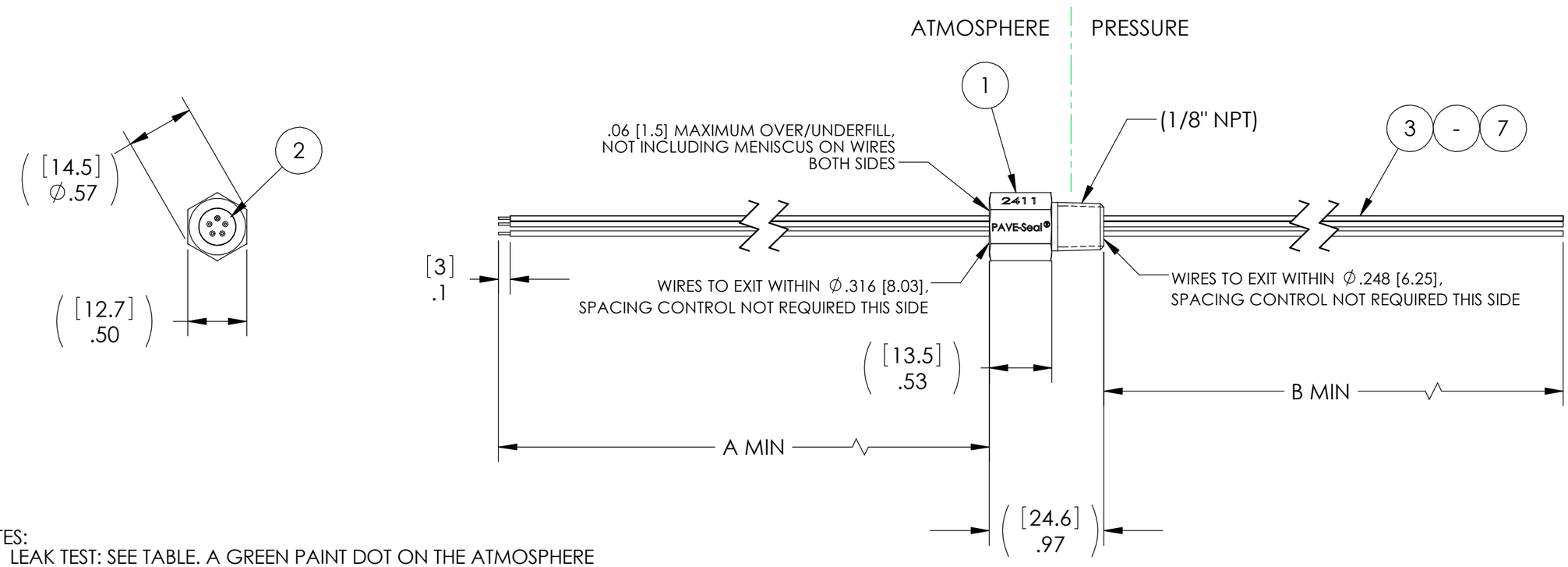

NOTES:

1. LEAK TEST: SEE TABLE. A GREEN PAINT DOT ON THE ATMOSPHERE SIDE INDICATES THE PART HAS PASSED THE TEST.
2. HYPOT 630 VDC 500 MEGOHMS MINIMUM 0.01 SECOND MINIMUM WIRE TO WIRE AND HOUSING.
3. ALL TESTS ARE PERFORMED AT ROOM TEMPERATURE.
4. ALL PARTS MUST PASS ALL TESTS.
5. WIRES ARE NOT REQUIRED TO BEND SHARPLY AT EPOXY SEAL SURFACE, COLOR POSITIONS ARE VARIABLE.
6. DIMENSIONS ARE INCHES [millimeters].
7. REF-OPERATING TEMPERATURE RANGE -20˚C TO 125˚C.
8. COSMETIC SURFACE VOIDS NOT ON O-RING SEALING SURFACES ARE ACCEPTABLE BASED ON THE SEAL'S DIAMETER:
   <= .5 [12.7] SEAL DIAMETER: ∅.035 [.89] MAX ALLOWED VOID SIZE
   > .5 [12.7] SEAL DIAMETER: ∅.060 [1.5] MAX ALLOWED VOID SIZE
9. PAVE-SEAL CAN BE A BI-DIRECTIONAL HERMETIC SEAL FOR VACUUM AND MOST PRESSURES. FOR PRESSURES ABOVE 150 PSI (10 BAR), CHECK WITH SALES ENGINEERING.

ITEM	QTY	PART NUMBER	DESCRIPTION
7	1	SEE TABLE	WIRE 24E MIL-W-16878/4 7/#32
6	1	E24 ORANGE	WIRE 24E MIL-W-16878/4 7/#32
5	1	SEE TABLE	WIRE 24E MIL-W-16878/4 7/#32
4	1	E24 RED	WIRE 24E MIL-W-16878/4 7/#32
3	1	E24 WHITE	WIRE 24E MIL-W-16878/4 7/#32
2	A/R	PAVE-Seal 150	EPOXY BLACK
1	1	2422-SS	HOUSING PT2-SS

PAVE technology co.
2751 Thunderhawk Court
Dayton, OH 45414-3445
U.S.A.
tel (937) 890-1100
fax (937) 8905165
www.pavetechnologyco.com

DESCRIPTION: SEE TABLE

PART NUMBER: 2411

MATERIAL: NOTED

REVISION LEVEL: F

PROJECTION

ALL DIMENSIONS AND TOLERANCES APPLY TO FINISHED PART IN INCHES.
ALLOWABLE TOLERANCES UNLESS SPECIFIED OTHERWISE: NONE ±0.5
X.X DECIMAL ±0.1 X.XX DECIMAL ±0.02 X.XXX DECIMAL ±0.005
ANGLES ±1 DEGREE SURFACE FINISH 128 microinch RMS