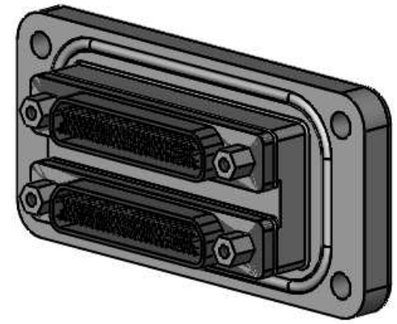

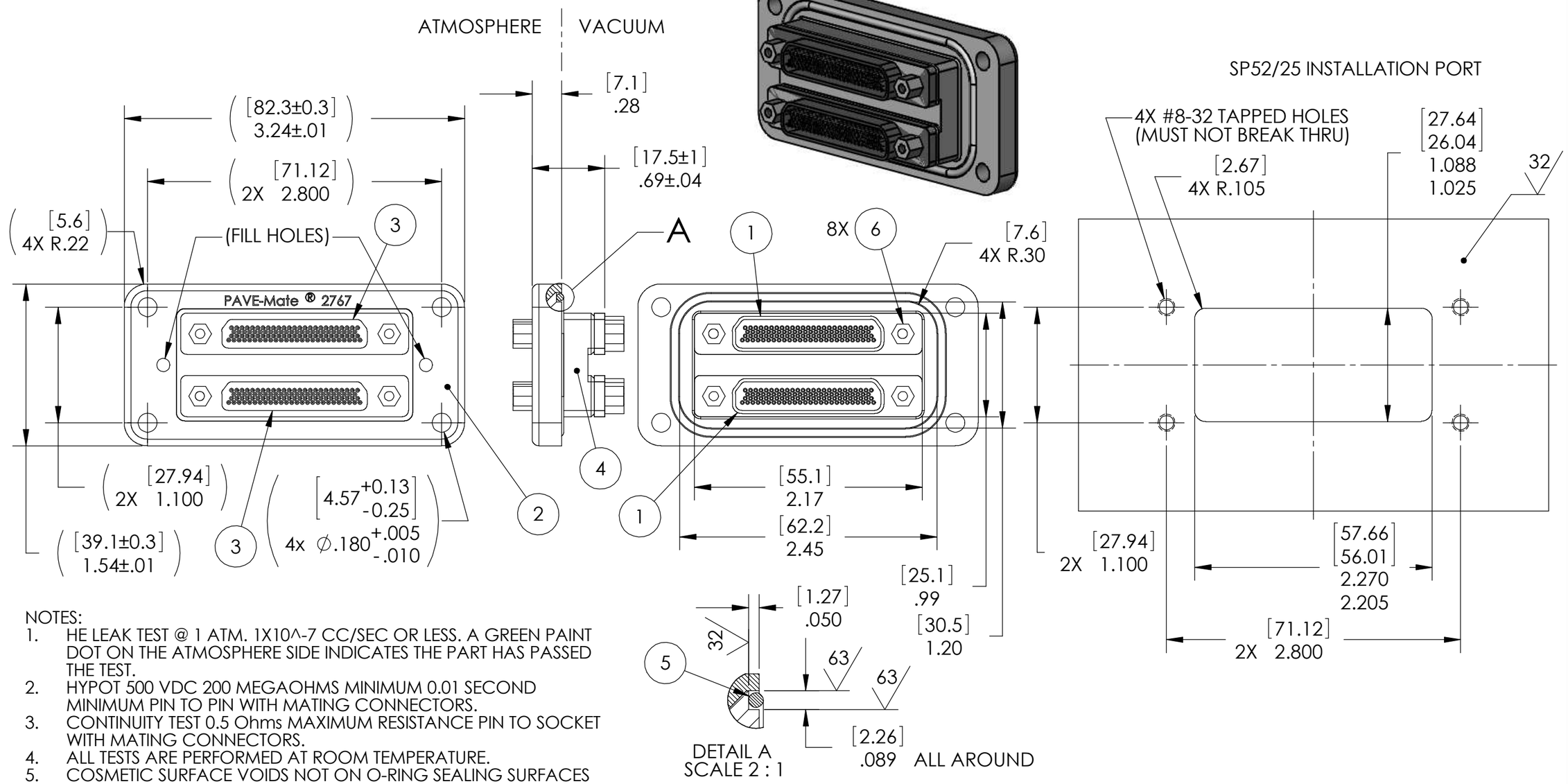

NOTES:

1. HE LEAK TEST @ 1 ATM. 1X10^-7 CC/SEC OR LESS. A GREEN PAINT DOT ON THE ATMOSPHERE SIDE INDICATES THE PART HAS PASSED THE TEST.
2. HYPOT 500 VDC 200 MEGAOHMS MINIMUM 0.01 SECOND MINIMUM PIN TO PIN WITH MATING CONNECTORS.
3. CONTINUITY TEST 0.5 Ohms MAXIMUM RESISTANCE PIN TO SOCKET WITH MATING CONNECTORS.
4. ALL TESTS ARE PERFORMED AT ROOM TEMPERATURE.
5. COSMETIC SURFACE VOIDS NOT ON O-RING SEALING SURFACES ARE ACCEPTABLE BASED ON THE SEAL'S DIAMETER:
   <= .5 [12.7] SEAL DIAMETER: ∅.035 [.89] MAX ALLOWED VOID SIZE
   > .5 [12.7] SEAL DIAMETER: ∅.060 [1.5] MAX ALLOWED VOID SIZE
6. ALL PARTS MUST PASS ALL TESTS.
7. DIMENSIONS ARE INCHES [millimeters].
8. PAVE PART NUMBER 2767-1 CONNECTORS ARE KEYED "A".
9. REF-OPERATING TEMPERATURE RANGE -20°C TO 125°C.
10. ALCOHOL OR FOMBLIN YVAC 3 MAY BE USED TO LUBRICATE O-RINGS FOR VACUUM HELIUM LEAK TESTING.

ALL DIMENSIONS AND TOLERANCES APPLY TO FINISHED PART IN INCHES.
ALLOWABLE TOLERANCES UNLESS SPECIFIED OTHERWISE: NONE ±0.5
X.X DECIMAL ±0.1 X.XX DECIMAL ±0.02 X.XXX DECIMAL ±0.005
ANGLES ±1 DEGREE SURFACE FINISH 128 microinch RMS

ITEM	QTY	PART NUMBER	DESCRIPTION
6	8	320-9505-030	JACKPOST M17 MICRO 4-40 THREAD
5	1	-034 VITON 90	O-RING -034 VITON 90
4	A/R	PAVE-Seal 150	EPOXY BLACK
3	2	M83513/01-HN	CONNECTOR 100 PIN 83513
2	1	2866	PLATE TOP AL6061 2x 100 PIN MICRO-D ELECTROLESS NICKEL PLATED
1	2	M83513/04-H05N	CONNECTOR 100 SOCKET 83513

PAVE technology co.
2751 Thunderhawk Court
Dayton, OH 45414-3445
U.S.A.
tel (937) 890-1100
fax (937) 8905165
www.pavetechnologyco.com

DESCRIPTION: SP52/25-E-150-200-25-M83513

PART NUMBER: 2767

MATERIAL: NOTED

REVISION LEVEL: A

PROJECTION