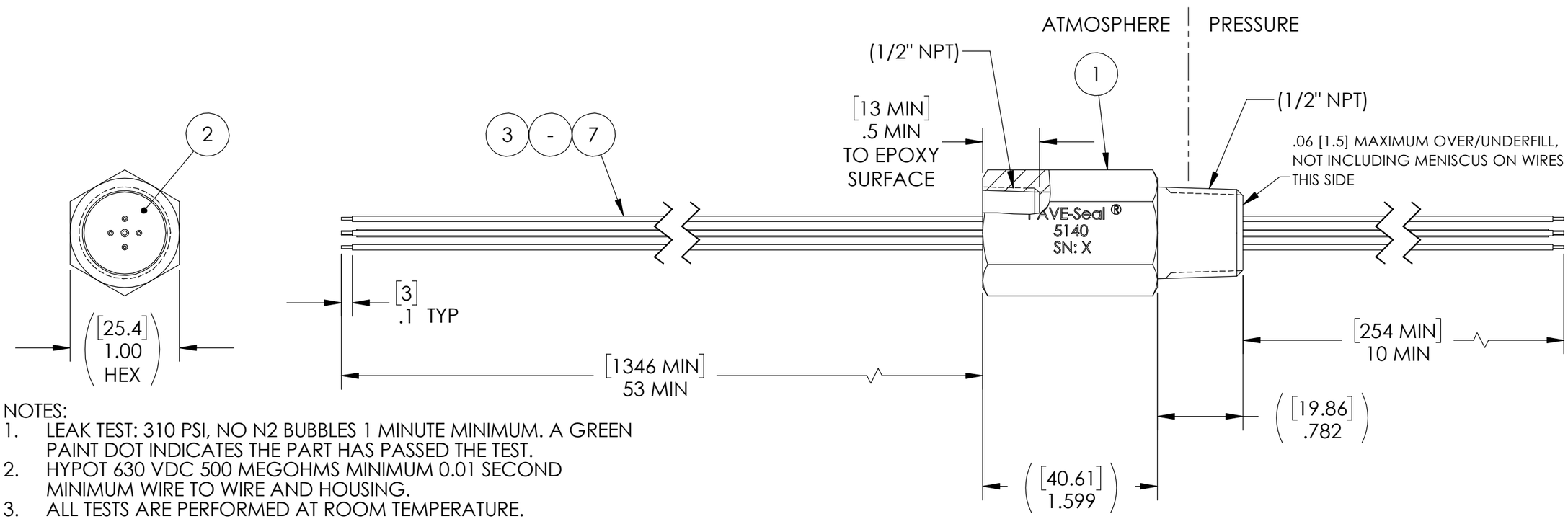

NOTES:

1. LEAK TEST: 310 PSI, NO N2 BUBBLES 1 MINUTE MINIMUM. A GREEN PAINT DOT INDICATES THE PART HAS PASSED THE TEST.
2. HYPOT 630 VDC 500 MEGOHMS MINIMUM 0.01 SECOND MINIMUM WIRE TO WIRE AND HOUSING.
3. ALL TESTS ARE PERFORMED AT ROOM TEMPERATURE.
4. ALL PARTS MUST PASS ALL TESTS.
5. WIRINGS ARE SEPARATED WITHIN THE CEMENTED JOINT WIDTH.
6. COSMETIC SURFACE NOT ON O-RING SEALING SURFACES ARE ACCEPTABLE BASED ON THE SEAL'S DIAMETER:
   <= .5 [12.7] SEAL DIAMETER: ∅.035 [.89] MAX ALLOWED VOID SIZE
   > .5 [12.7] SEAL DIAMETER: ∅.060 [1.5] MAX ALLOWED VOID SIZE
7. REF-OPERATING TEMPERATURE RANGE -20˚C TO 190˚C.
8. DIMENSIONS ARE INCHES [millimeters].
9. PAVE-SEAL CAN BE A BI-DIRECTIONAL HERMETIC SEAL FOR VACUUM AND MOST PRESSURES. FOR PRESSURES ABOVE 150 PSI (10 BAR), CHECK WITH SALES ENGINEERING.
10. PART IS RoHS COMPLIANT.
11. QUALIFICATION ONLY: 16 HOUR BAKE @ 190˚C, FOLLOWED BY A 1 HOUR SOAK @ -20˚C, BEFORE LEAK TESTING.
12. PARTS WILL BE IDENTIFIED BY ETCHING WITH A SERIAL NUMBER, STARTING WITH 1. FOR EXAMPLE: "SN:1"
13. EACH SHIPMENT MUST INCLUDE A DECLARATION OF CONFORMITY STATING THAT THE PRODUCTS WERE MANUFACTURED ACCORDING TO 5140 REV: [REVISON LETTER], DESCRIPTION, SERIAL NUMBER(S), AND QUANTITY.

ITEM	QTY	PART NUMBER	DESCRIPTION
7	1	E22 YELLOW	WIRE 22E MIL-W-16878/4 .010 7/#30
6	1	E22 RED	WIRE 22E MIL-W-16878/4 .010 7/#30
5	1	E22 ORANGE	WIRE 22E MIL-W-16878/4 .010 7/#30
4	1	E22 BLUE 7 STR	WIRE 22E MIL-W-16878/4 .010 7/#30
3	1	E18 GREEN	WIRE 18E MIL-W-16878/4 7/#26
2	A/R	PAVE-Seal 200FR	EPOXY BLACK FM/UL V-094 APPROVED
1	1	5146	HOUSING PT8XL-SS

PAVE technology co.
2751 Thunderhawk Court
Dayton, OH 45414-3445
U.S.A.
tel (937) 890-1100
fax (937) 8905165
www.pavetechnologyco.com

DESCRIPTION: PT8XL-SS-200UL94-1/4-TE18/22-53-10

PART NUMBER: 5140

MATERIAL: NOTED

REVISION LEVEL: D

PROJECTION

ALL DIMENSIONS AND TOLERANCES APPLY TO FINISHED PART IN INCHES.
ALLOWABLE TOLERANCES UNLESS SPECIFIED OTHERWISE: NONE ±0.5
X.X DECIMAL ±0.1 X.XX DECIMAL ±0.02 X.XXX DECIMAL ±0.005
ANGLES ±1 DEGREE SURFACE FINISH 128 microinch RMS